文件資料管制 文件資料管制 文件資料管制 All rights reserved

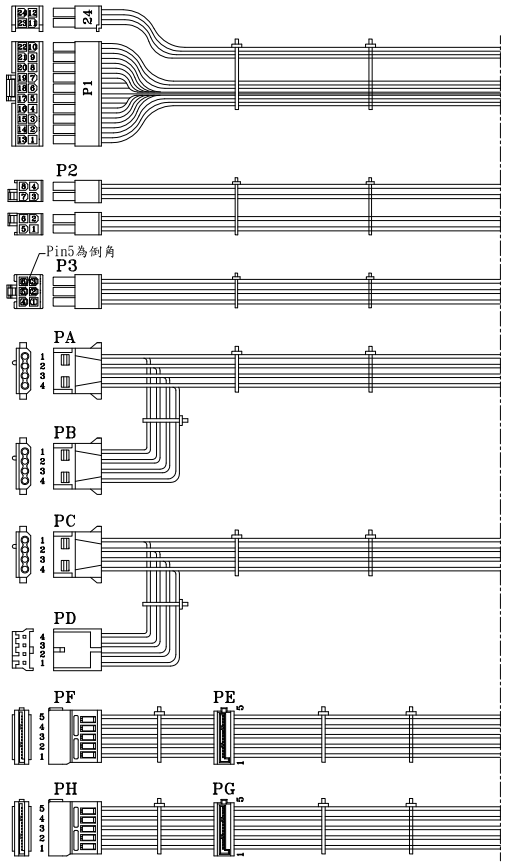

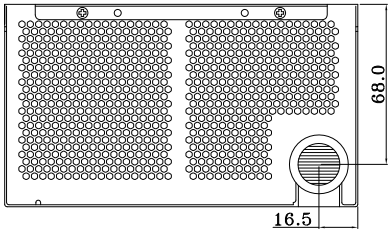

② 增加EAN CODE

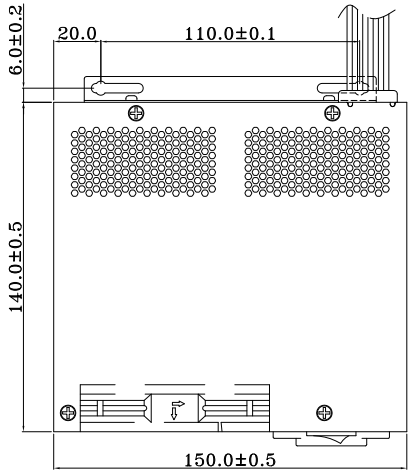

REF. ID.	PIN NO.	SIGNAL	WIRE COLOR	GAUGE	CONNECTOR TYPE	CABLE LENGTH
P1 / 24	1	+3.3VDC	ORANGE	20	WST P20-142002K11DZ-W +P4-42002K11DZ-W or EQUIV.	500±15mm
	2	+3.3VDC	ORANGE	20		
	3	COM	BLACK	20		
	4	+5VDC	RED	20		
	5	COM	BLACK	20		
	6	+5VDC	RED	20		
	7	COM	BLACK	20		
	8	PW-ON	GRAY	22		
	9	+5Vsb	PURPLE	20		
	10	+12V2	YELLOW	20		
	11	+12V2	YELLOW	20		
	12	+3.3VDC	ORANGE	20		
	13	+3.3VDC	ORANGE	20		
		+3.3VSense	BROWN	22		
	14	-12VDC	BLUE	22		
	15	COM	BLACK	20		
	16	PS-ON	GREEN	22		
	17	COM	BLACK	20		
	18	COM	BLACK	20		
	19	COM	BLACK	20		
	20	-5VDC	WHITE	22		
	21	+5VDC	RED	20		
	22	+5VDC	RED	20		
	23	+5VDC	RED	20		
	24	COM	BLACK	20		
P2	1	COM	BLACK	20	WST P4-142002K3BZ-W +P4-142002K4BZ-W or EQUIV.	500±15mm
	2	COM	BLACK	20		
	3	COM	BLACK	20		
	4	COM	BLACK	20		
	5	+12V1	Yel/Black	20		
	6	+12V1	Yel/Black	20		
	7	+12V2	YELLOW	20		
	8	+12V2	YELLOW	20		
P3	1	+12V1	Yel/Black	20	WST P6-142002BK5Z or EQUIV.	400±15mm
	2	+12V1	Yel/Black	20		
	3	+12V1	Yel/Black	20		
	4	COM	BLACK	20		
	5	COM	BLACK	20		
	6	COM	BLACK	20		
PA	1	+12V1	Yel/Black	20	WST P4-A10202Z or EQUIV.	500±15mm
	2	COM	BLACK	20		
	3	COM	BLACK	20		
	4	+5V	RED	20		
PB	1	+12V1	Yel/Black	20	WST P4-A10202Z or EQUIV.	155±10mm
	2	COM	BLACK	20		
	3	COM	BLACK	20		
	4	+5V	RED	20		
PC	1	+12V2	YELLOW	20	WST P4-A10202Z or EQUIV.	500±15mm
	2	COM	BLACK	20		
	3	COM	BLACK	20		
	4	+5V	RED	20		
PD	1	+5V	RED	22	AMP 171822-4 or EQUIV.	155±10mm
	2	COM	BLACK	22		
	3	COM	BLACK	22		
	4	+12V2	YELLOW	22		
PE / PG	1	+3.3VDC	ORANGE	20	MOLEX SD-67926-0311 or EQUIV.	500±15mm
	2	COM	BLACK	20		
	3	+5V	RED	20		
	4	COM	BLACK	20		
	5	+12V2	YELLOW	20		
PF / PH	1	+3.3VDC	ORANGE	20	MOLEX SD-67582-001 or EQUIV.	155±10mm
	2	COM	BLACK	20		
	3	+5V	RED	20		
	4	COM	BLACK	20		
	5	+12V2	YELLOW	20		

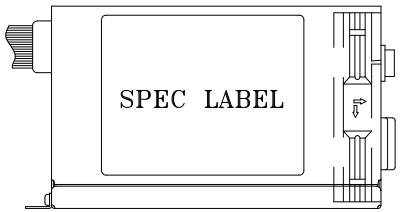

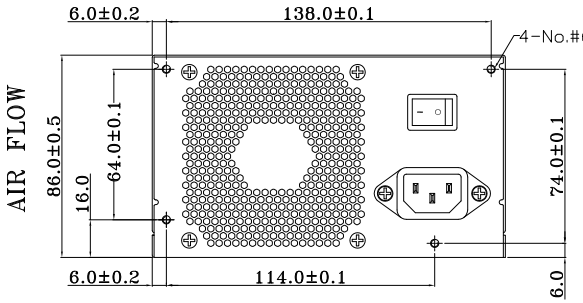

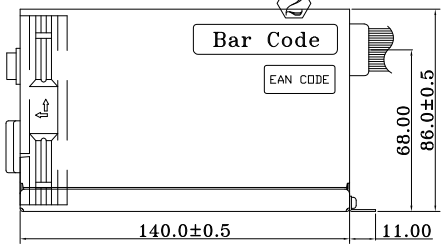

P/N.:9PA4604401

NOTE:

1. ALL THE LENGTH OF OUTPUT WIRES EXCLUDE HOUSING.

UNIT:mm

MODEL NO. : FSP460-70PFL(SK)(F660001)		TITLE: ASSY	SHEET: 1 OF 1	REV:02
R&D(2)	PE	DRAWN	DATE	
		黃淑芳	JUL.16.2018	
INTERIOR COUNTERSIGN:				

建立時間:2018-07-17 15:52:52
OAD-00001963-R02.pdf
1/1禁止翻印外洩 All rights reserved